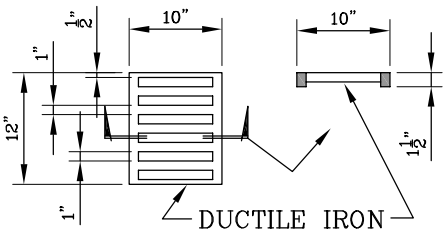

PLAN VIEW SECTION

TYPICAL TRENCH INLET GRATE

(1 TOTAL FOR EACH INLET)

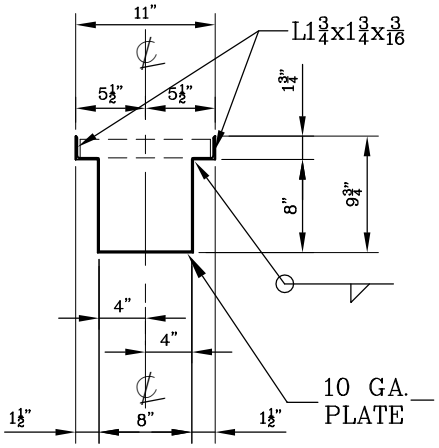

A=A

TRENCH INLET SECTION

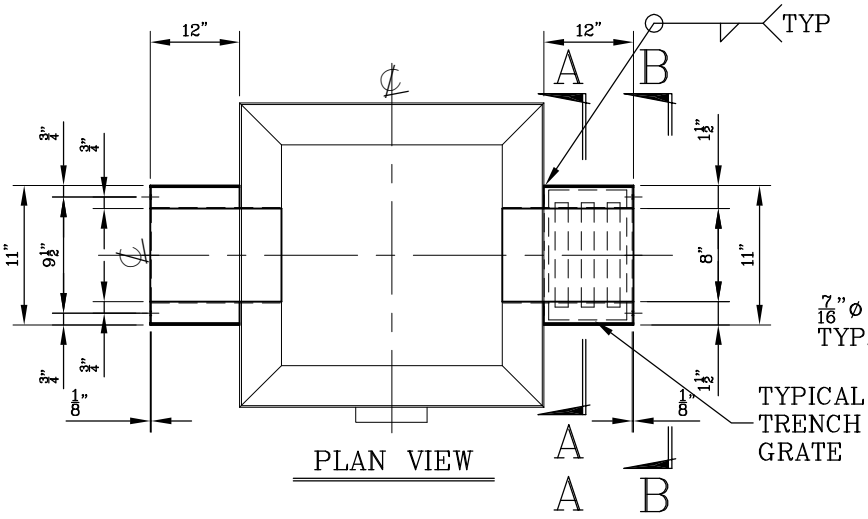

PLAN VIEW

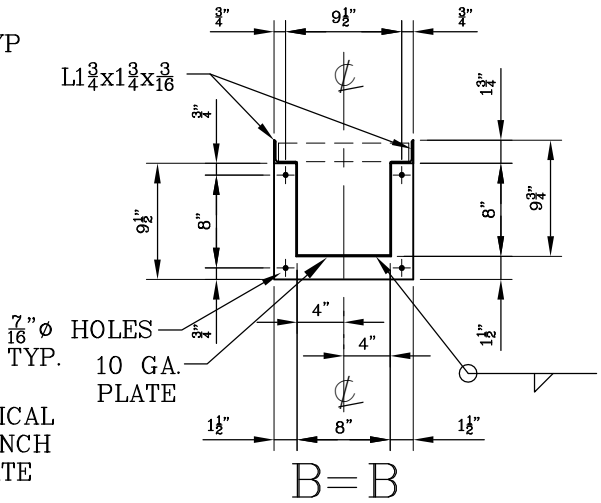

B=B

END PLATE ELEVATION

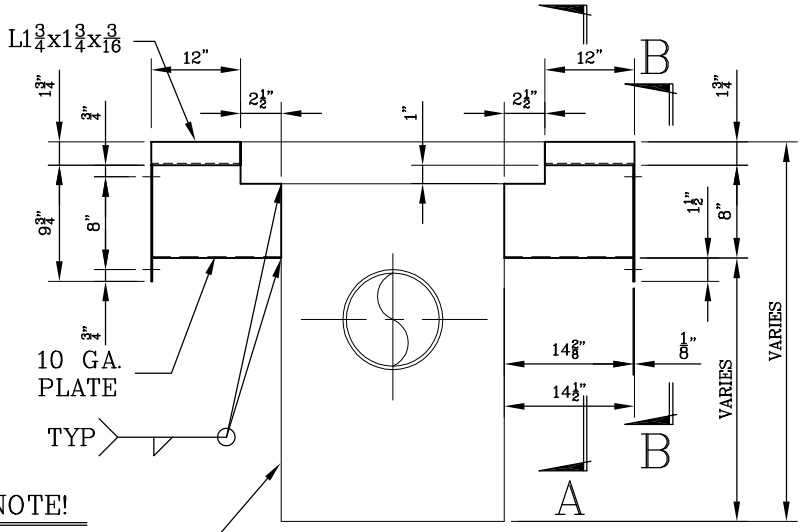

NOTE!

24" SQUARE STORM SEWER CATCH BASIN (DEPTHS VARY)

INLET SIDE ELEVATION

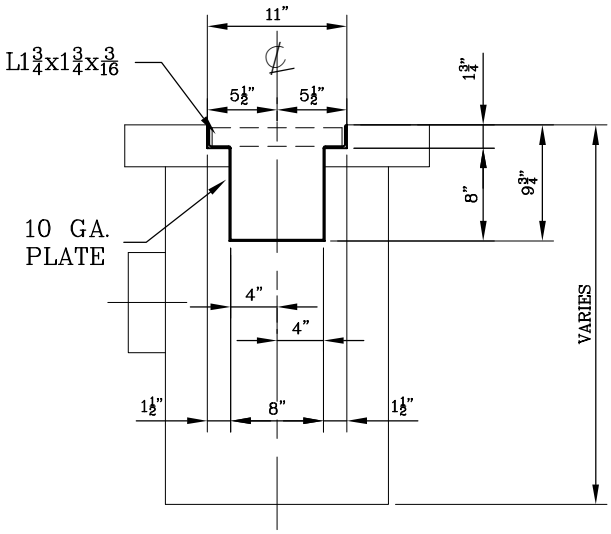

INLET FRONT ELEVATION

TYPICAL TRENCH DRAIN INLET

Gibson Steel Basins
SINCE 1972

8" WIDE x 8" DEEP INLET

TRENCH DRAIN INLET (STORM SEWER CATCH BASIN)

PROJ. MAN. DOUG P.	DWN. PAUL G.	SCALE NONE	DWG #
DATE: JAN. 23, 06	MODEL: GTDB-88D		TDB 8D

247 Washington St. Eugene, Or. 97410 ph:(541) 687 - 8672 fax:687-0033