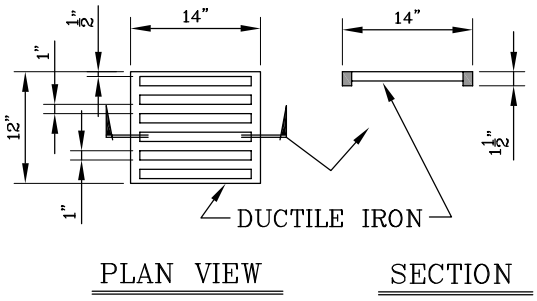

TYPICAL TRENCH INLET GRATE

(1 TOTAL FOR EACH INLET)

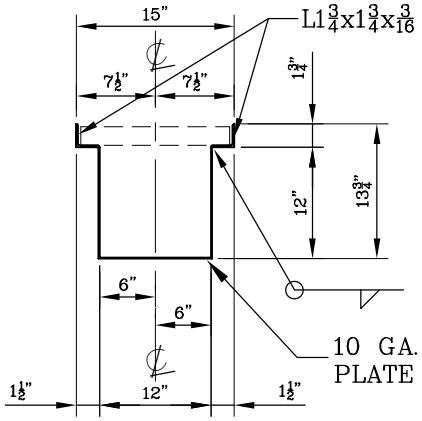

TRENCH INLET SECTION

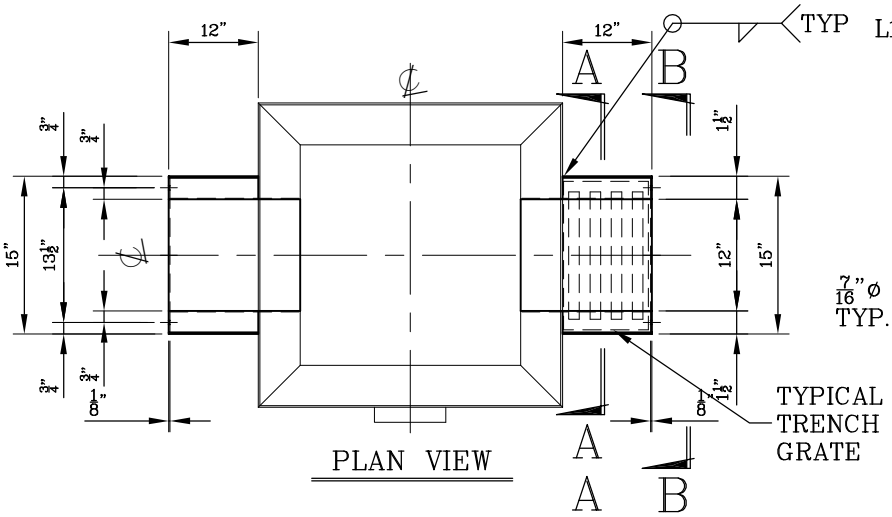

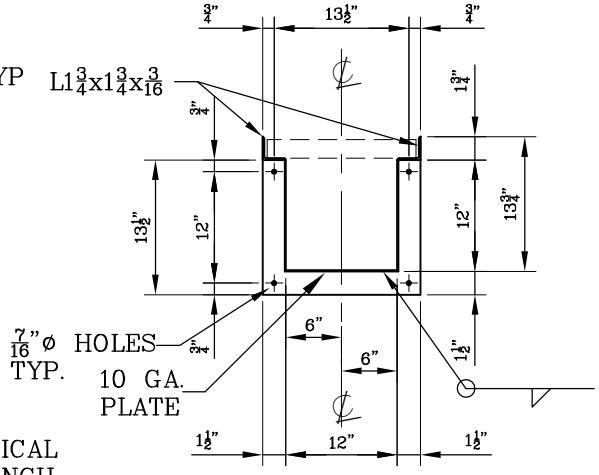

END PLATE ELEVATION

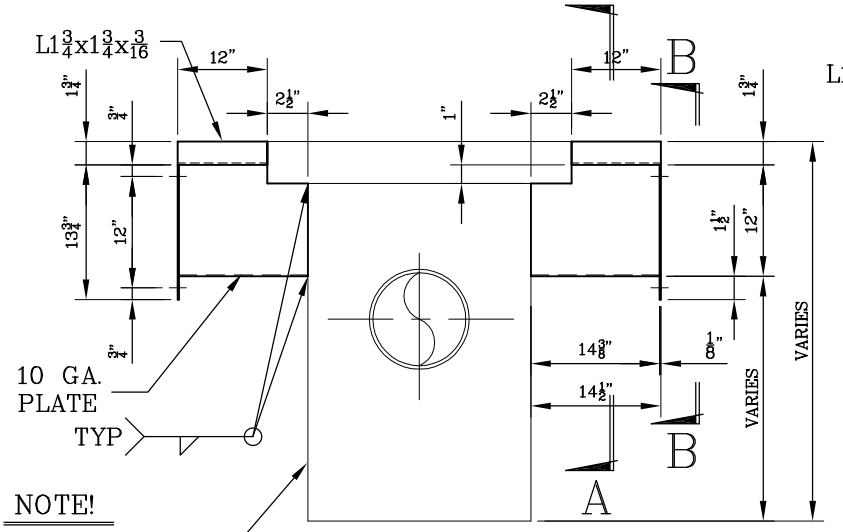

NOTE!

24" SQUARE STORM SEWER CATCH BASIN (DEPTHS VARY)

INLET SIDE ELEVATION

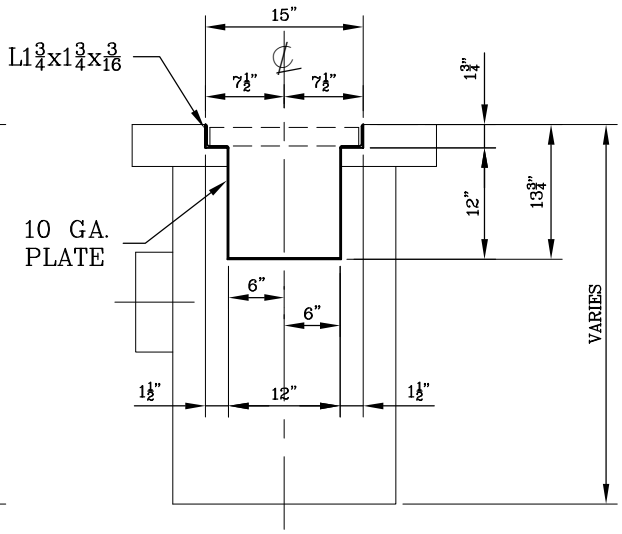

INLET FRONT ELEVATION

TYPICAL TRENCH DRAIN INLET

Gibson Steel Basins
SINCE 1972

12" WIDE x 12" DEEP INLET

TRENCH DRAIN INLET (STORM SEWER CATCH BASIN)

PROJ. MAN. DOUG P.	**DWN.** PAUL G.	**SCALE** NONE
DATE: JAN. 23, 06	**MODEL:** GTDB-1212D	

DWG # **TDB 12D**

247 Washington St. Eugene, Or. 97410 ph:(541) 687 – 8672 fax:687-0033